3D Graphics Processor Chip Set

Makoto Awaga
Senior Engineer
awaga@sldd.ed.fujitsu.co.jp

APPLIED SYSTEM LSI DIVISION
FUJITSU LIMITED

FUJITSU

Outline

- Background of the design
- Chip set configuration
- Product overview
- Summary

FUJITSU

5.1-03

Background of the design

3D Graphics performance trend

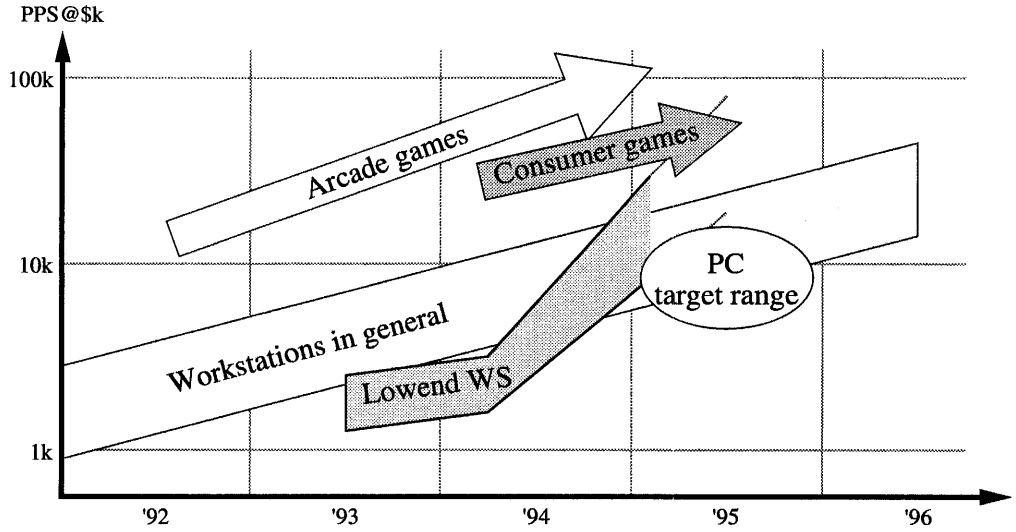

FUJITSU

5.1-04

Background of the design

3D Graphics operation layers applied to PC

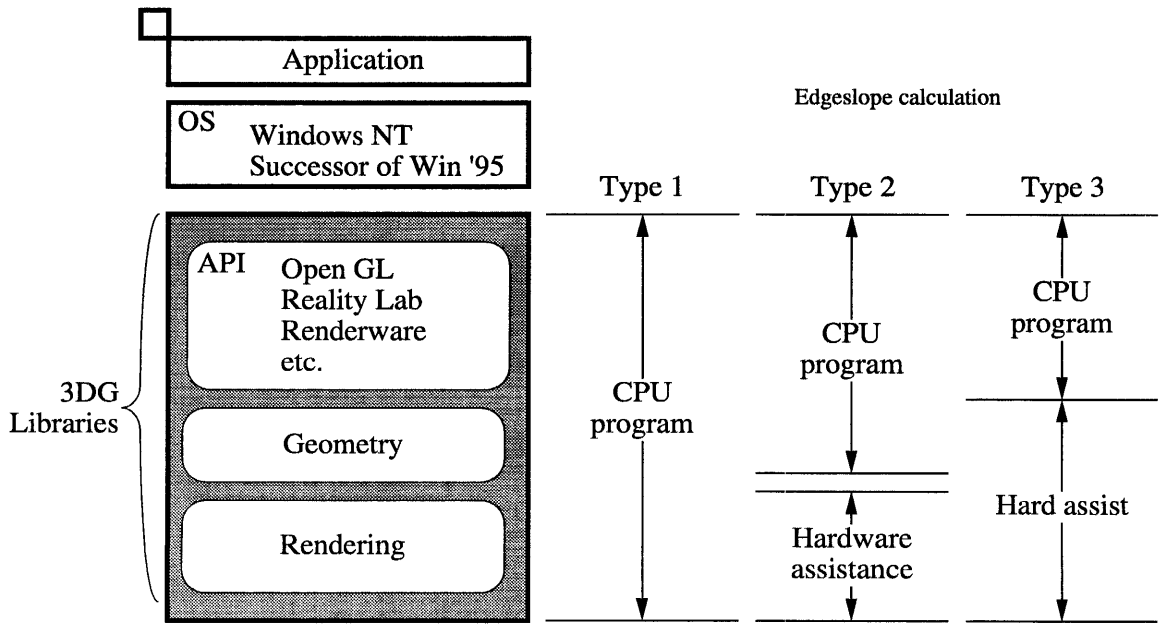

FUJITSU

Background of the design

3D Graphics processing stages

Geometry process	Coordinate transform
	Side detection
	View volume clip
	Lighting calculation
	Screen projection
	Edgeslope calculation
	Z sort
Rendering process	Rasterization
	DDA
	Texture mapping, Alpha blending
	Scissor/Window clip, Stencil
	Z compare

adopted in realitime applications

Z-sort is not applicable in 3D-DDI

Local hardware assistance applicable in 3DDDI

FUJITSU

Background of the design

Objectives

- Support a total solution of local 3DG acceleration (offer balanced performance of geometry and rendering)
- To be applicable for both run time and authoring applications (support both Z-sort and Z-buffer algorithms)
- Realize 300k polygons/sec sustained performance by a chip set (to be competitive against the highend arcade game machines)
- Provide a flexible solution to accelerate the performance scalably depending on each applied system's target range

FUJITSU

5.1-07

Chip Set Configuration

- MB86235 (TGPx4 : Three dimentional Geometry Processor x4)

  - Floating point DSP (80MFLOPS@40MHz)
  - Geometry operation performance:
    300k polygons/sec (isolated triangle flat polygons)
    180k polygons/sec (isolated triangle gouraud polygons)

- MB86271 (AGP : Advanced Graphics Processor)

  - Rendering Processor (120MIPS@60MHz)
  - Rendering performance:
    450k polygons/sec (isolated triangle gouraud polygons : 25pixels/polygon)
    15M texcels/sec (point sampled texture mapping : 200pixels/polygon)

- MB86272 (Z-sorter)

  - Polygon Sorter
  - Sorting performance : 300k polygons/sec

FUJITSU

5.1-08

Chip set configuration

System block diagram [1]

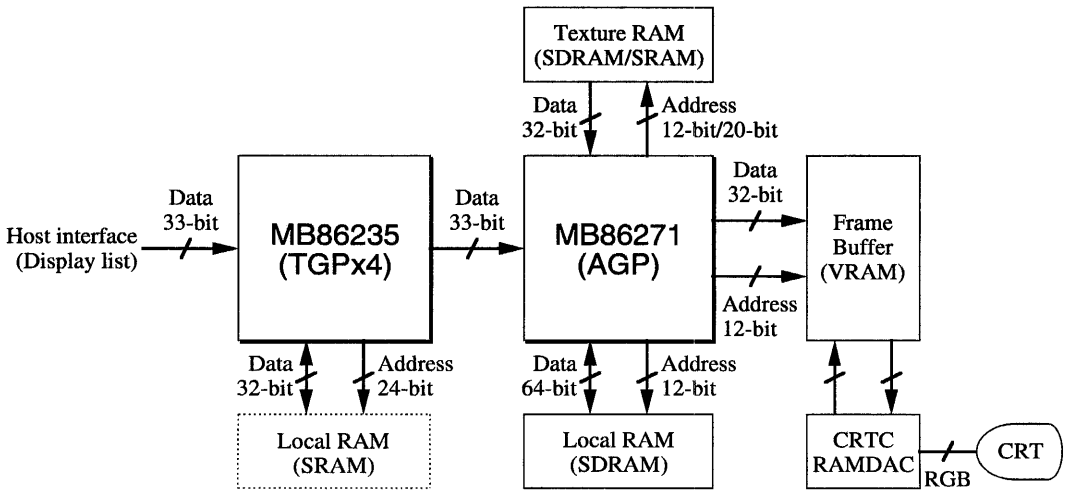

FUJITSU

Chip set configuration

System block diagram [2]

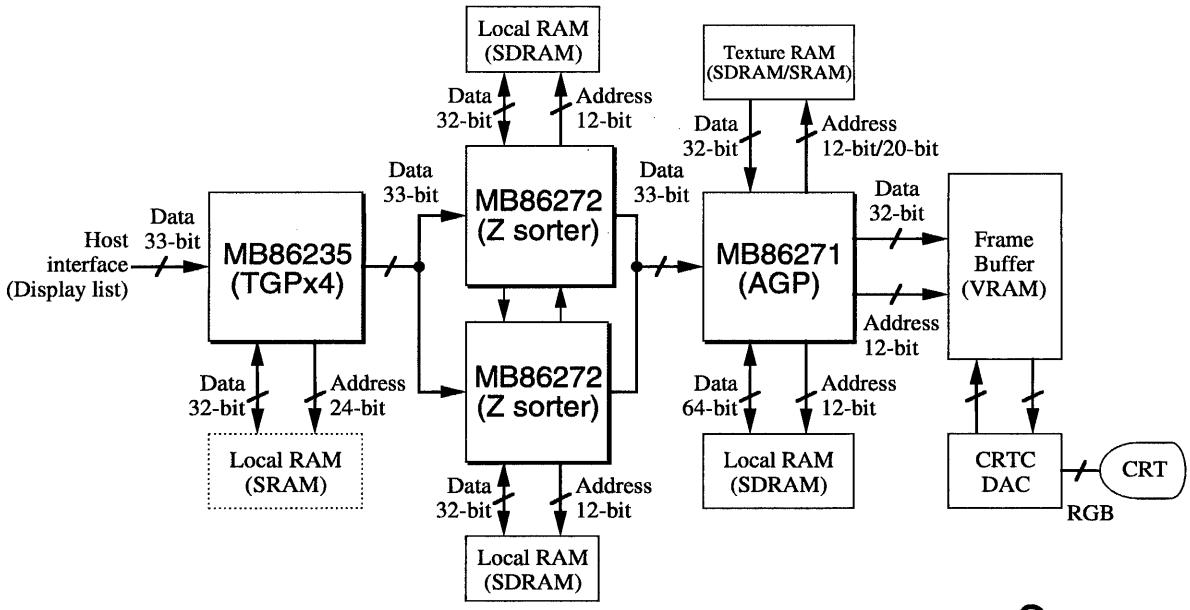

FUJITSU

Chip set configuration

System block diagram [3]

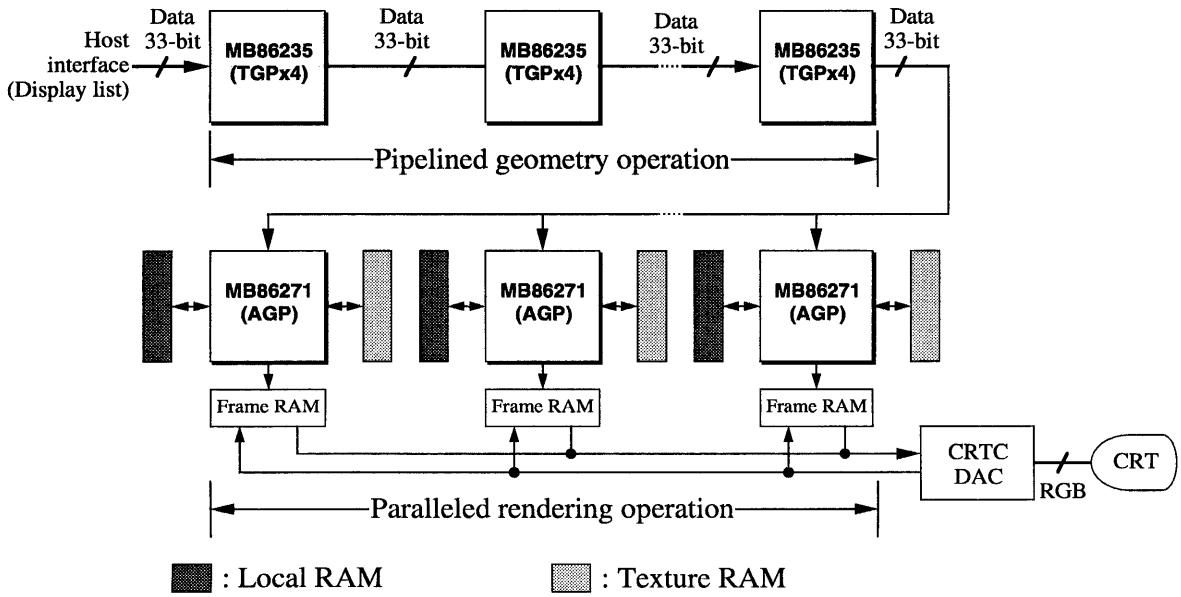

FUJITSU

5.1-11

Product overview

MB86235 (TGPx4) : Block diagram

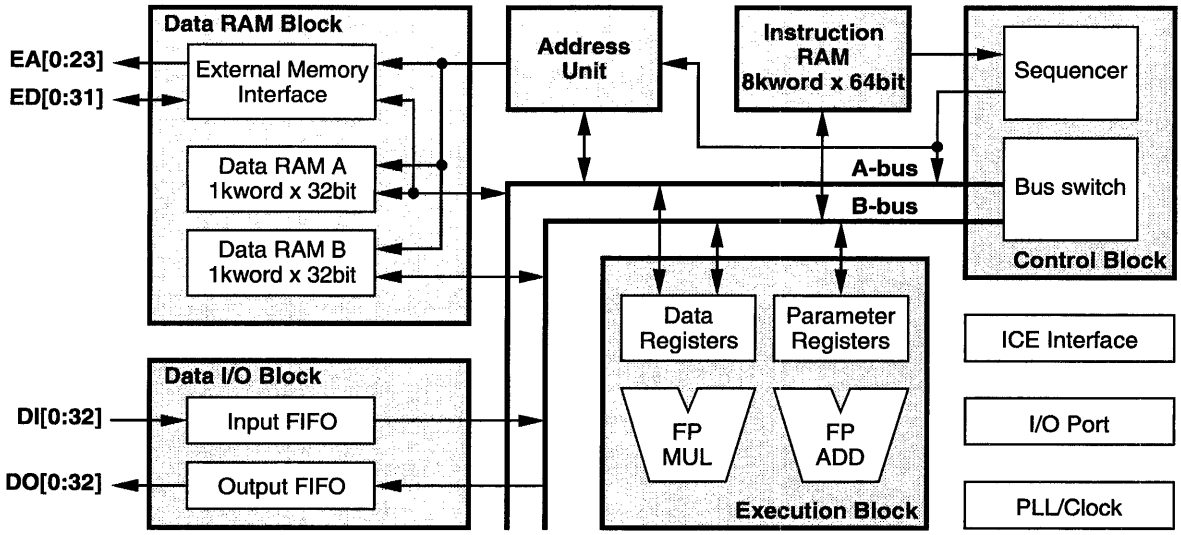

FUJITSU

5.1-12

Product overview

MB86235 (TGPx4) : Execution block

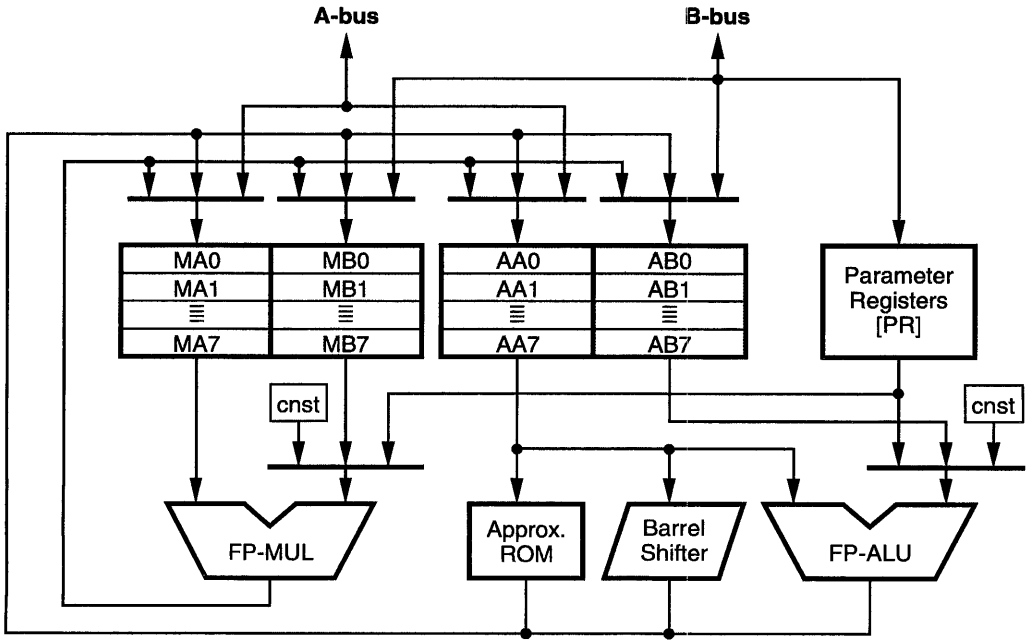

FUJITSU

Product overview

MB86235 (TGPx4) : Coordinate transformation

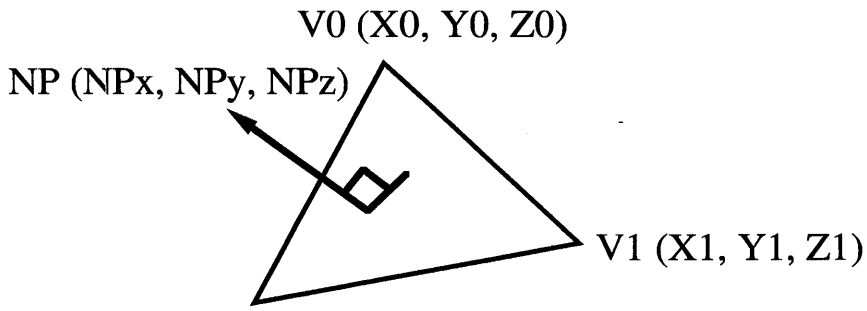

$$\begin{pmatrix} Xn' \\ Yn' \\ Zn' \end{pmatrix} = \begin{pmatrix} C_{00} & C_{01} & C_{02} & C_{03} \\ C_{10} & C_{11} & C_{12} & C_{13} \\ C_{20} & C_{21} & C_{22} & C_{23} \end{pmatrix} \begin{pmatrix} Xn \\ Yn \\ Zn \\ 1 \end{pmatrix}$$

FUJITSU

Product overview

MB86235 (TGPx4) : Instruction format and sample coding

MSB 63 61	60 42	41 27	26 LSB 0
000	ALU field	MUL field	Transfer field [Type 1]

```
XOR   AA0, AA0, AA0   :                          :  MOV1   FI, MB0
XOR   AA2, AA2, AA2   :  FMUL   MB0, PR++, AB0   :  MVD1   AA0, AA1, FI, MB1
FADD  AA0, AB0, AA0   :  FMUL   MB1, PR++, AB1   :  MOV1   FI, MB2
FADD  AA0, AB1, AA0   :  FMUL   MB2, PR++, AB2   :  MOV1   #1, MB3
FADD  AA0, AB2, AA0   :  FMUL   MB3, PR++, AB3   :
FADD  AA0, AB3. AA0   :  FMUL   MB0, PR++, AB0   :
FADD  AA1, AB0, AA1   :  FMUL   MB1, PR++, AB1   :  MOV1   AA0, @AA7++
FADD  AA1, AB1, AA1   :  FMUL   MB2, PR++, AB2   :
FADD  AA1, AB2, AA1   :  FMUL   MB3, PR++, AB3   :
FADD  AA1, AB3, AA1   :  FMUL   MB0, PR++, AB0   :
FADD  AA2, AB0, AA2   :  FMUL   MB1, PR++, AB1   :  MOV1   AA1, @AA7++
FADD  AA2, AB1, AA2   :  FMUL   MB2, PR++, AB2   :
FADD  AA2, AB2, AA2   :  FMUL   MB3, PR++, AB3   :
FADD  AA2, AB3, AA2   :                          :  MOV1   #0, PRP
                      :                          :  MOV1   AA2, @AA7++
```

← ALU field → | ← MUL field → | ← Transfer field →

FUJITSU

5.1-15

Product overview

MB86235 (TGPx4) : Parameter registers

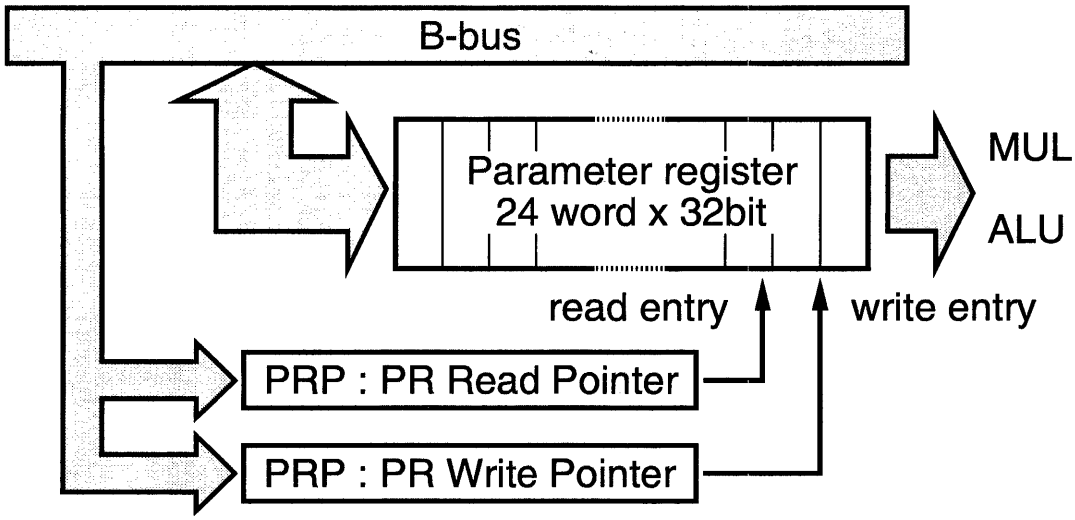

FUJITSU

5.1-16

Product overview

MB86235 (TGPx4) : Performance estimation

		Flat shading	Gouraud shading
[1] Coordinate transform [2] Side detection [3] Lighting calculation [4] Screen projection [5] Y-sort [6] Edgeslope calculation		52 3 13 20 12 36	90 3 38 20 12 56
Case I [1]-[5]	Execution cycles	100	163
	Performance @40MHz	400k pps	245k pps
Case II [1]-[6]	Execution cycles	136	219
	Performance @40MHz	300k pps	183k pps

FUJITSU

Product overview

MB86271 (AGP) : Block diagram

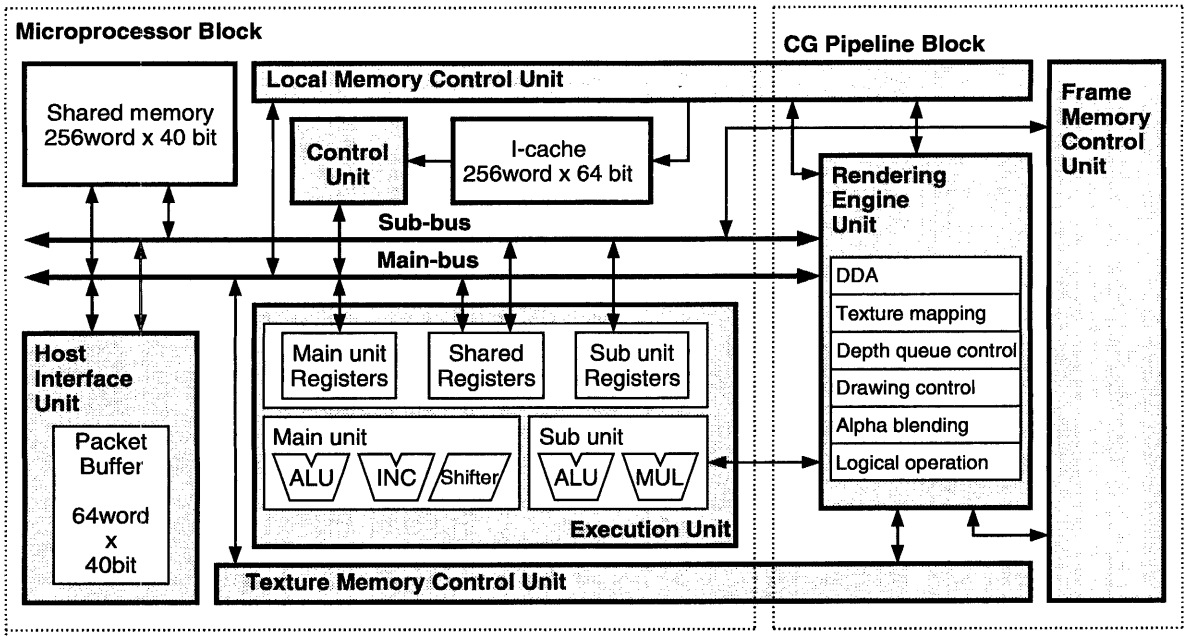

FUJITSU

Product overview

MB86271 (AGP) : Internal parallel operation scheme

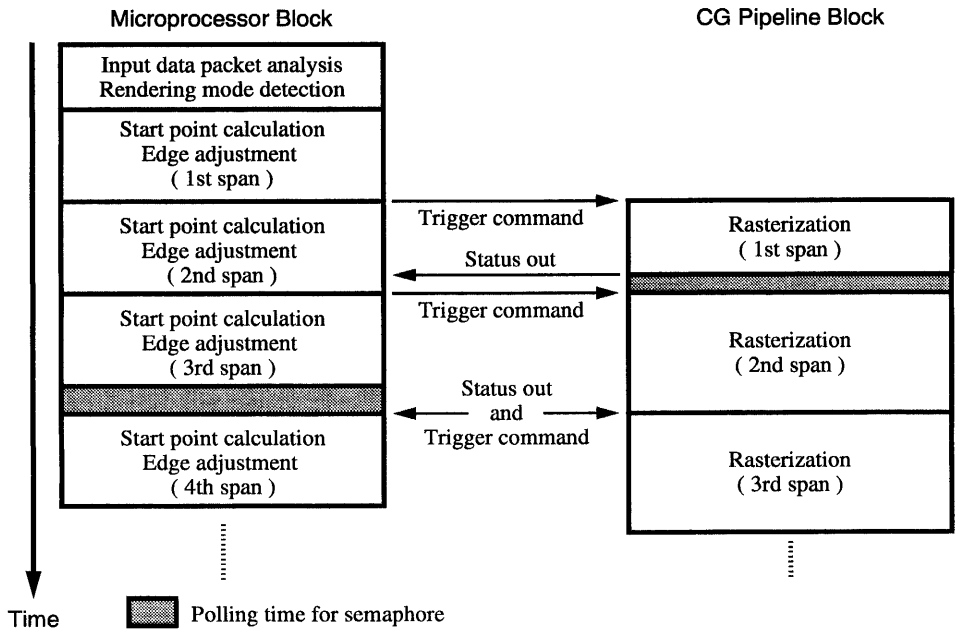

FUJITSU

5.1-19

Product overview

MB86271 (AGP) : Input data packet

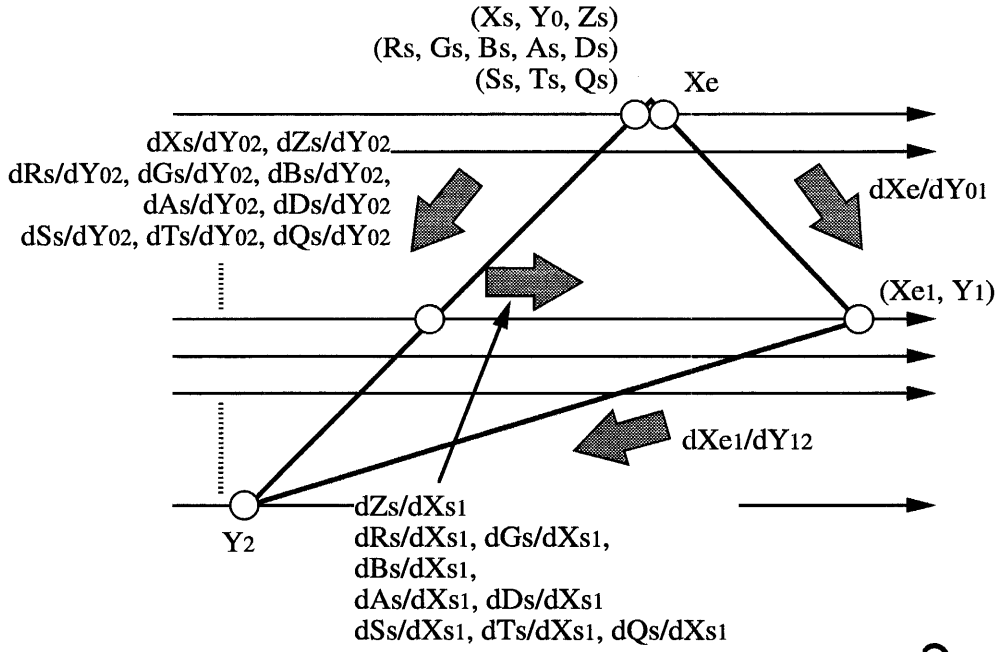

FUJITSU

5.1-20

Product overview

MB86271 (AGP) : Execution unit block diagram

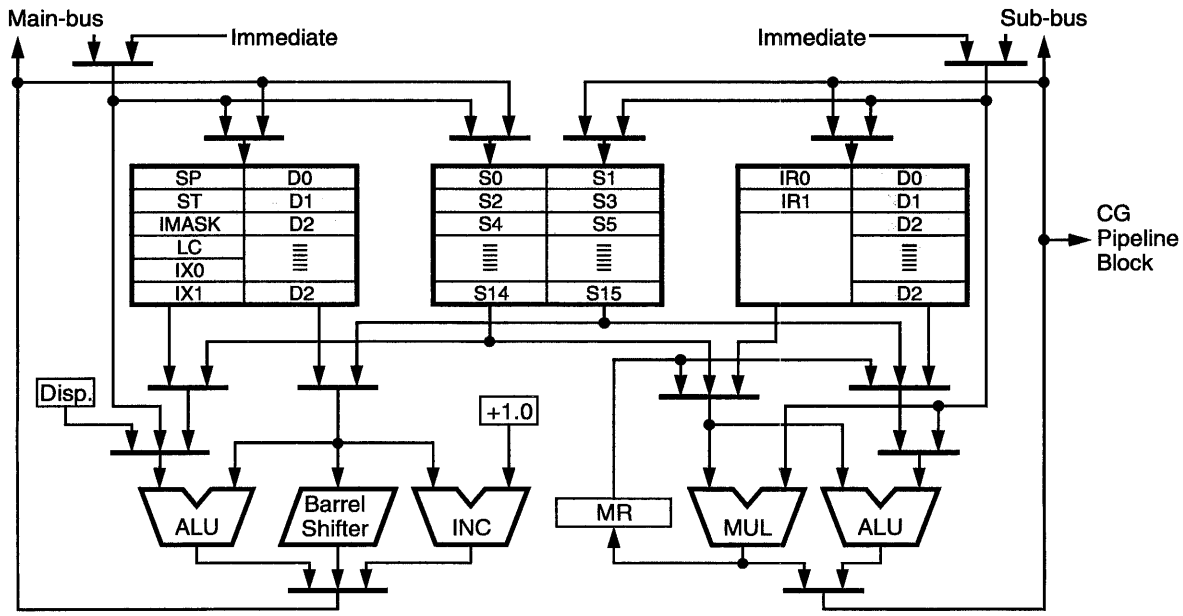

FUJITSU

Product overview

MB86271 (AGP) : Data path flow in the rendering engine unit

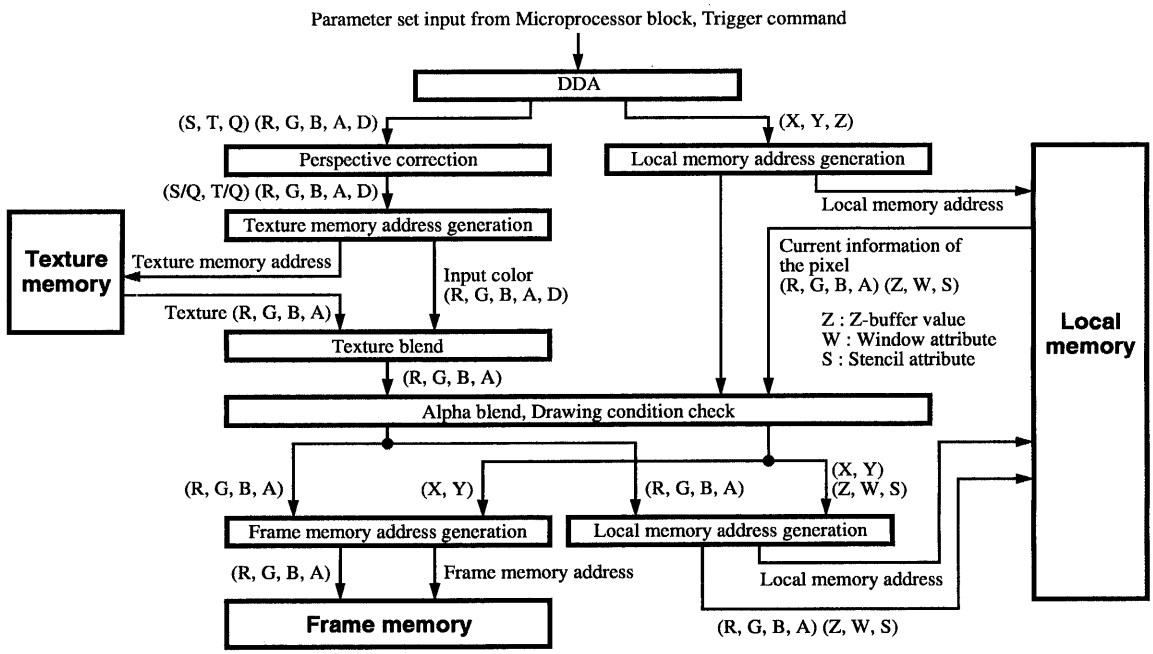

FUJITSU

Product overview

MB86271 (AGP) : Flat/Gouraud shading performance

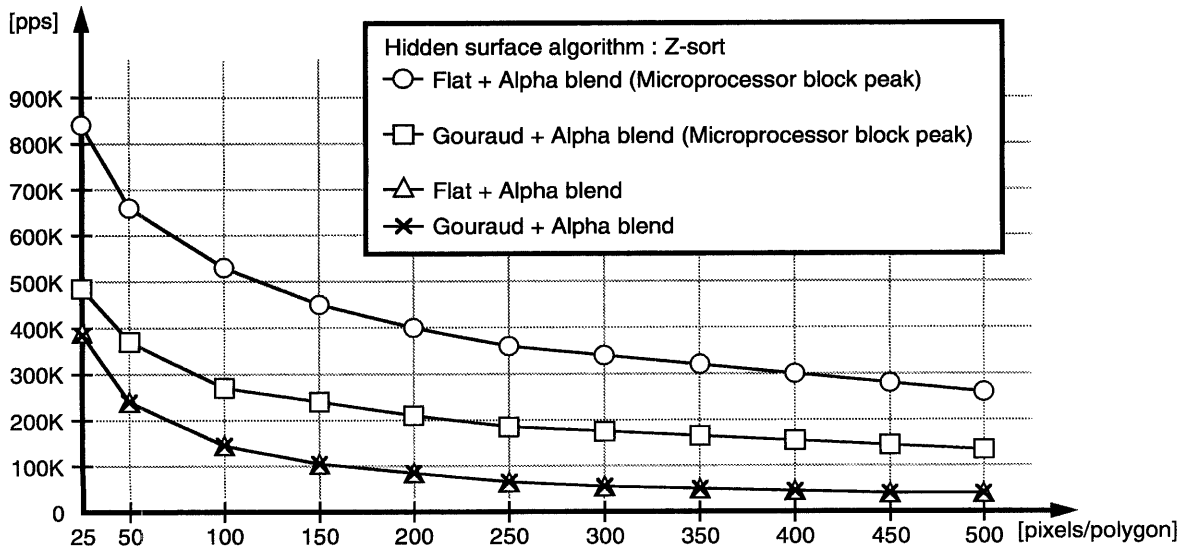

FUJITSU

5.1-23

Product overview

MB86271 (AGP) : Texture mapping performance

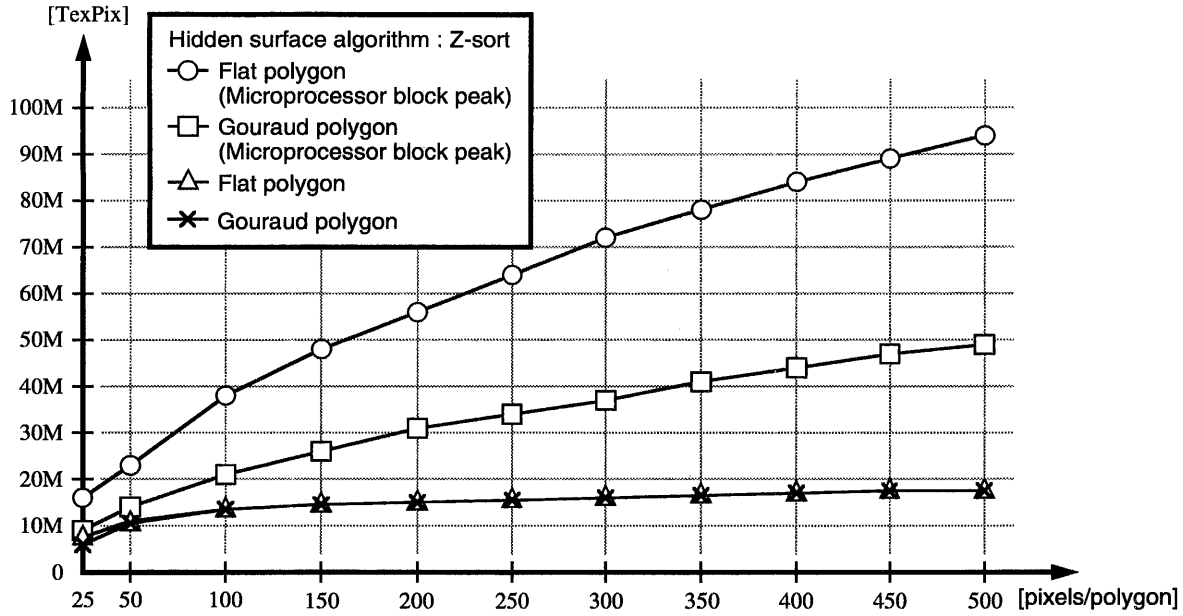

FUJITSU

5.1-24

Summary

- New 3D Graphics chip set including geometry processor and Z-sorter
- World highest level of 3DG performance on both engineering/design CAD and realtime 3D Graphic applications
- Provides flexible structure to realize the most appropriate performance level for various types of application systems
- Going to support extensive software drivers for standard 3D Graphics platform
- Next stage is to integrate the functions of those 3 chips into single LSI to offer an intensive solution to PC 3D Graphics.

FUJITSU

5.1-25

MB86235 (TGPx4) : Die photo

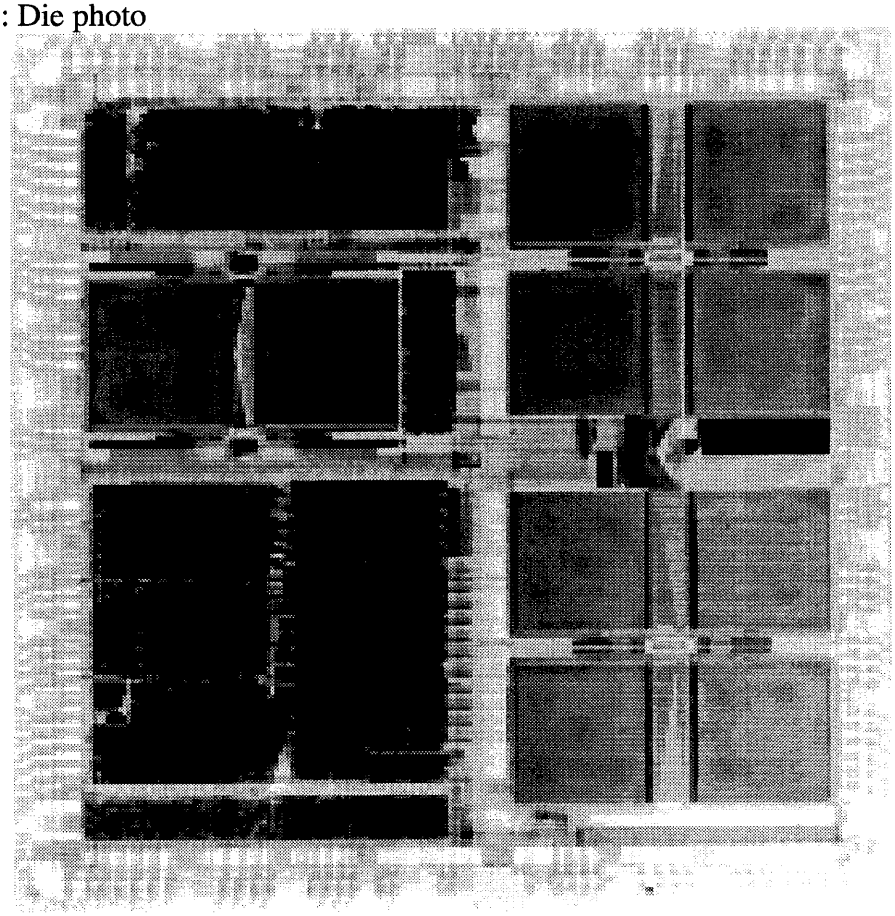

5.1-26
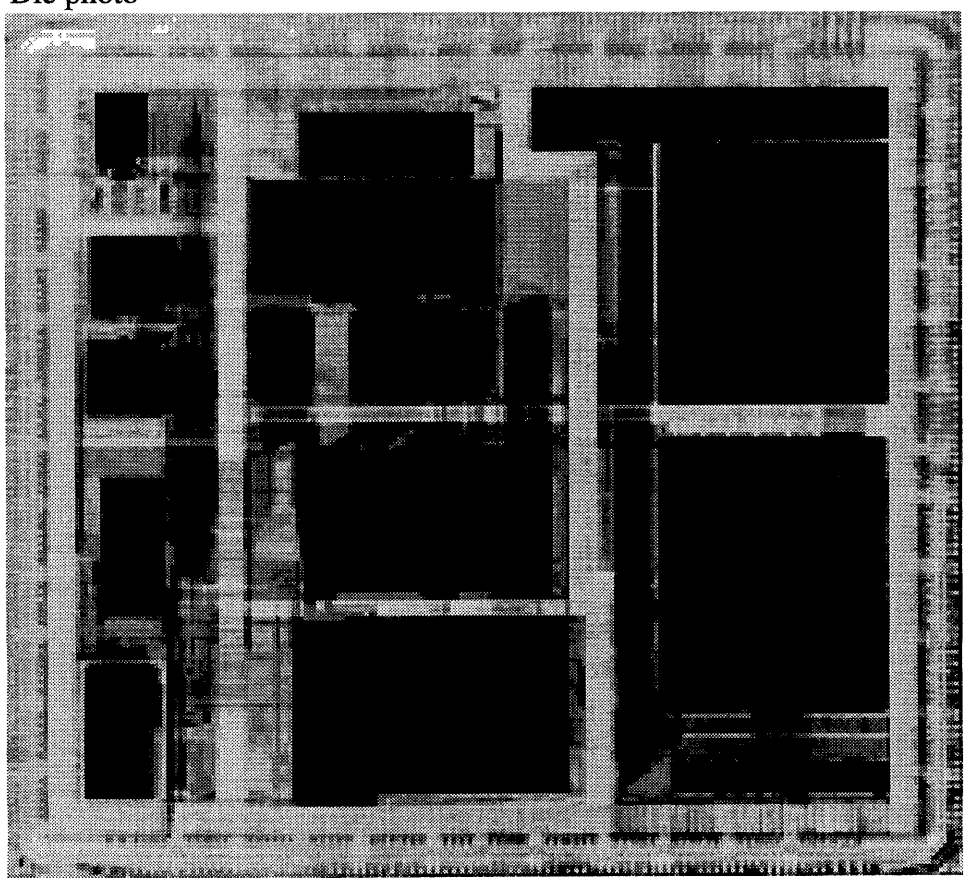
MB86271 (AGP) : Die photo